MAGICUBE

The concealed performance

RAL
GÜTEZEICHEN
S+B
Drehbeschläge
und
Drehkippbeschläge

180 Kg

Made in Italy

fapim®
Life in evolution

MAGICUBE

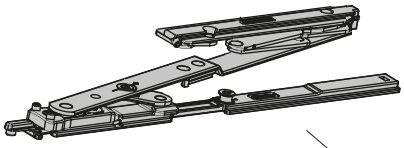

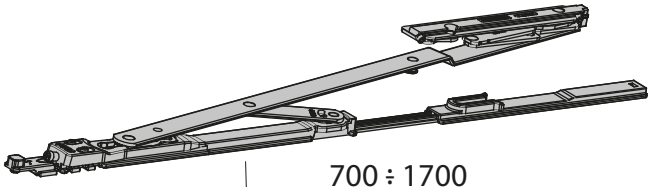

422 ÷ 800

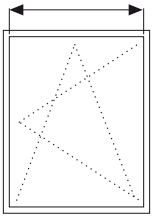

700 ÷ 1700

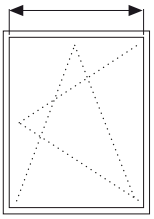

RAL GÜTEZEICHEN

S+B Drehbeschläge und Drehkippbeschläge

180 Kg

180°

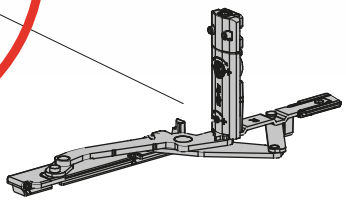

Art. 1459C

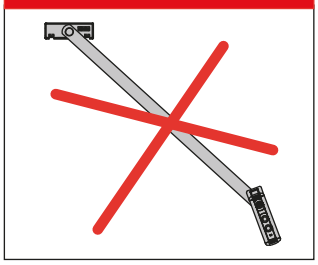

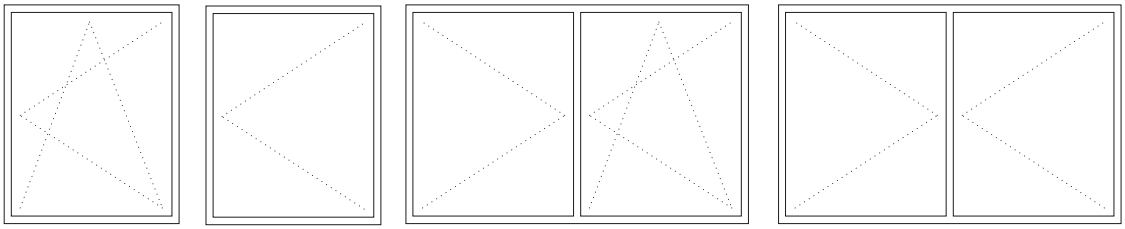

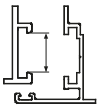

C.E.
10x14.5
12x15
13.6x16.8
14x18

fapim®

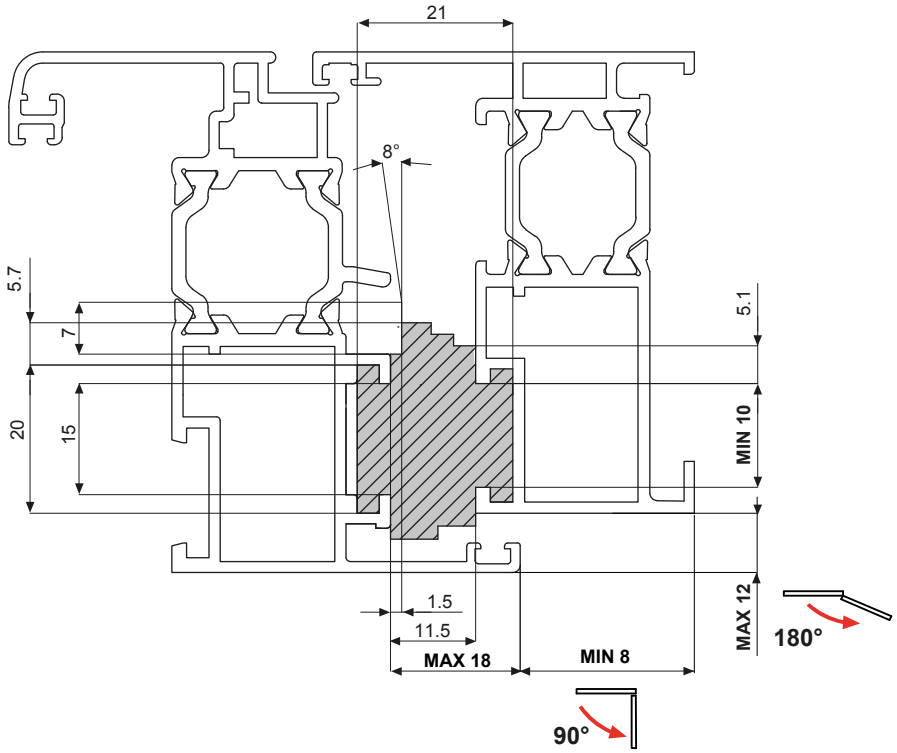

FAPIM SOLUTION

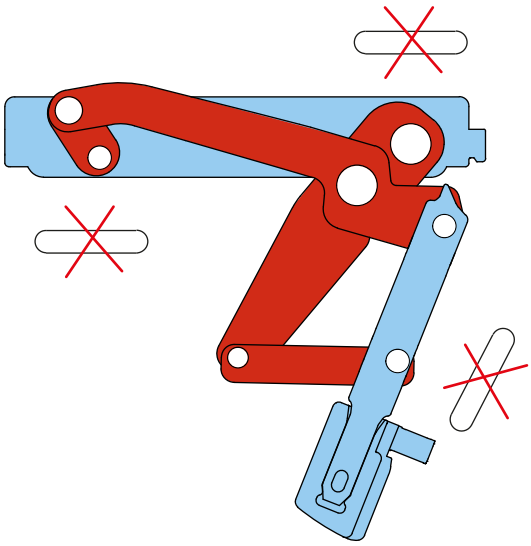

OTHER SOLUTIONS

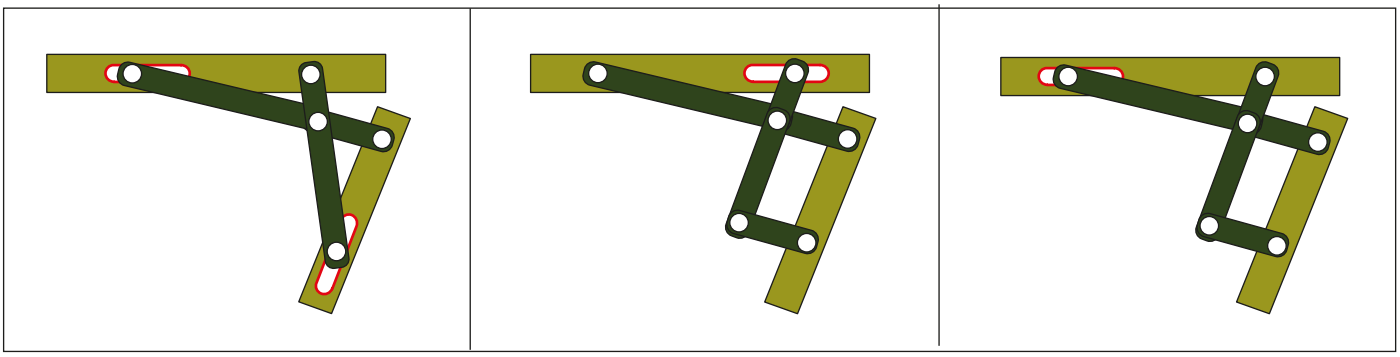

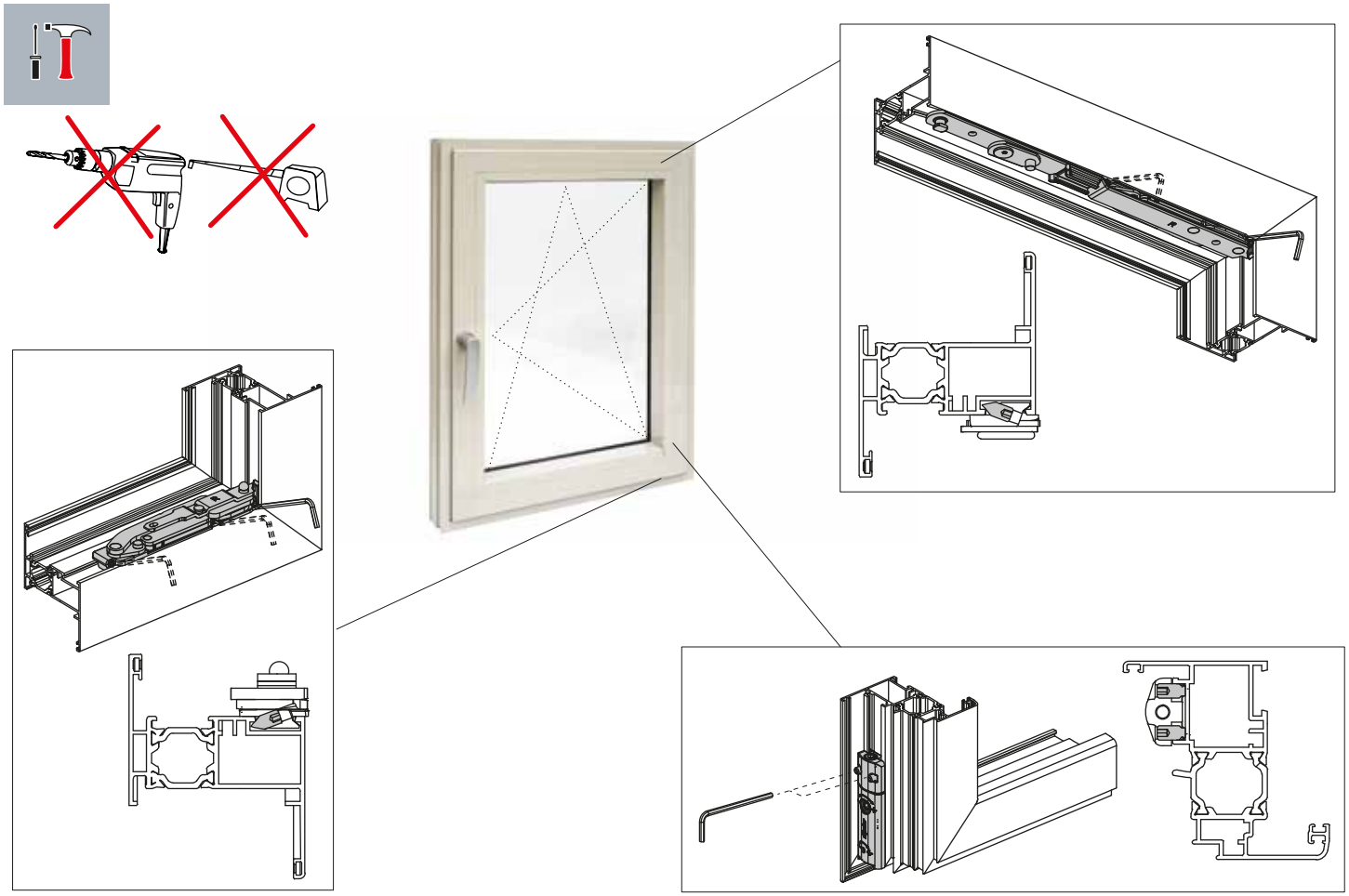

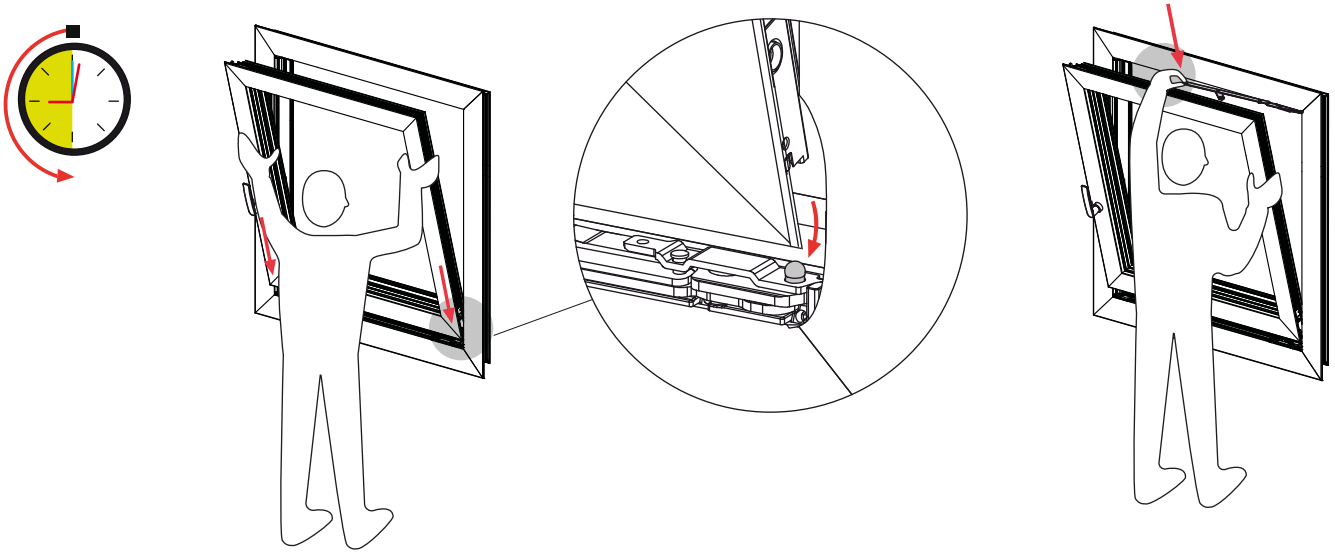

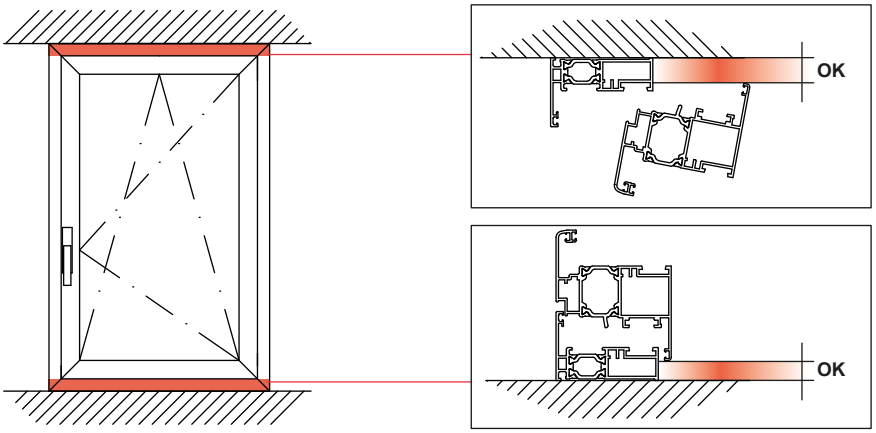
OK
OK

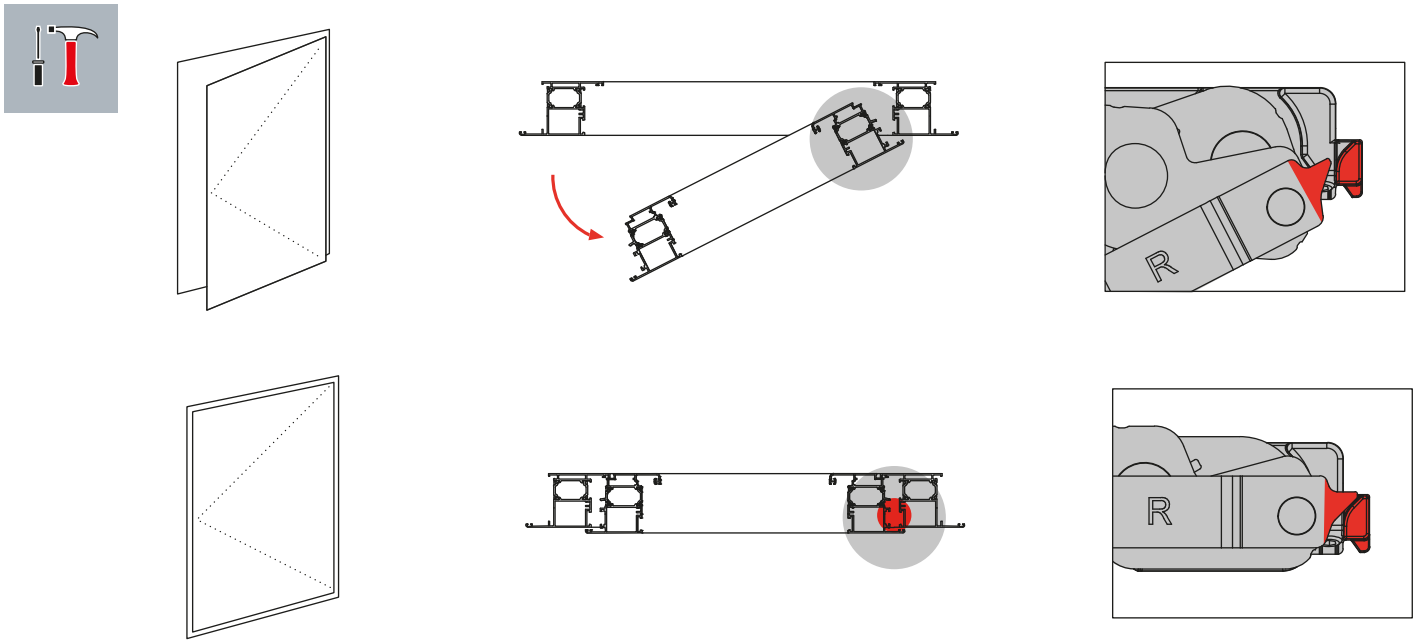
R
R

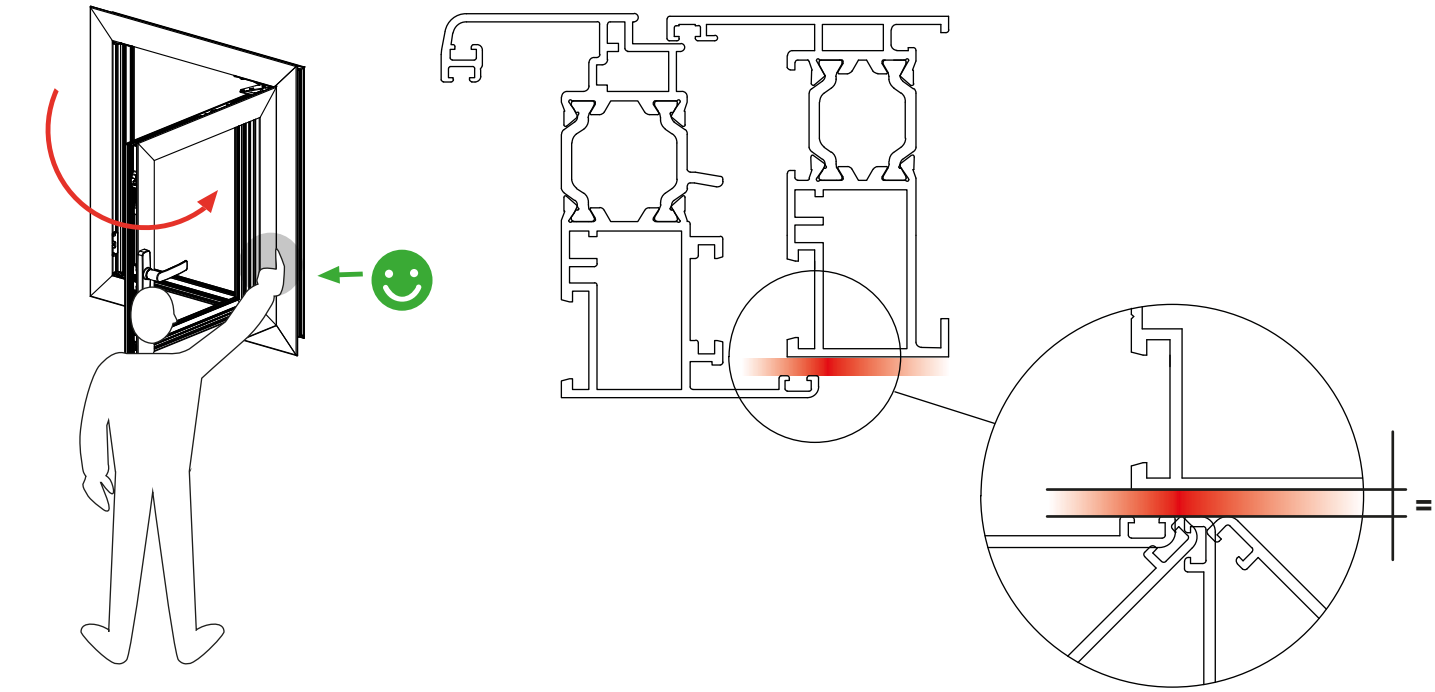
=

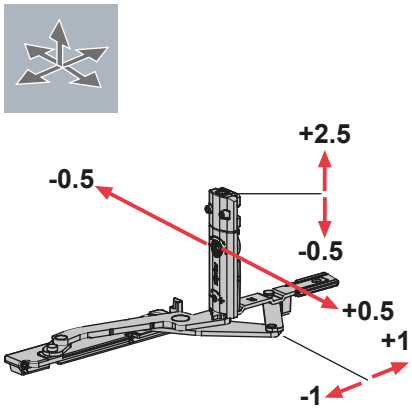
+2.5
-0.5
-0.5
+0.5
+1
-1

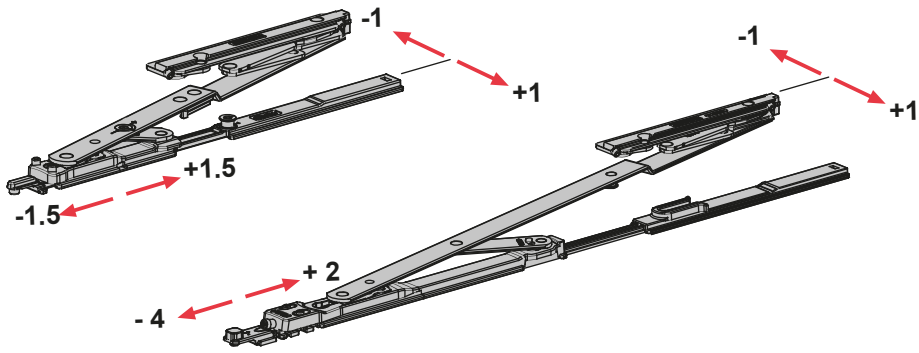
-1
+1
+1.5
-1.5
-1
+1
+ 2
- 4

						C.E.	Kg	
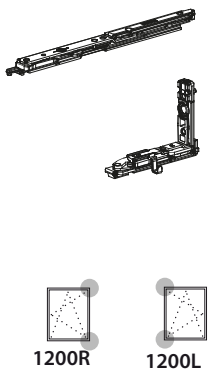	1200R	●	●		422÷800			10
	1200L							
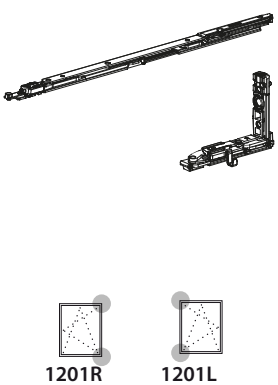	1201R	●	●		700÷1700	10x14.5 12x15 13.6x16.8 14x18	180	10
	1201L							
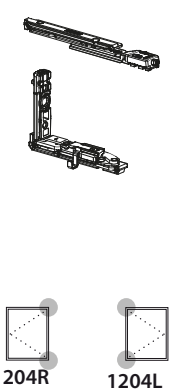	1204R		●	●				10
	1204L							

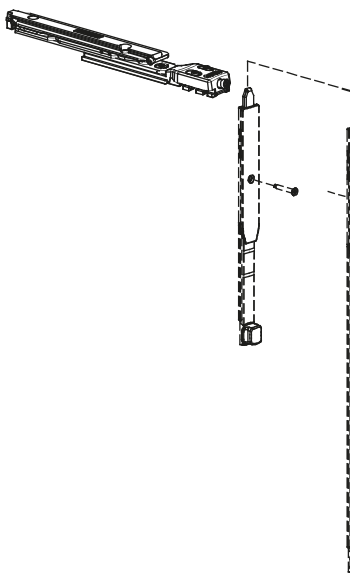

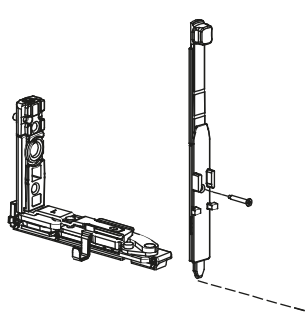

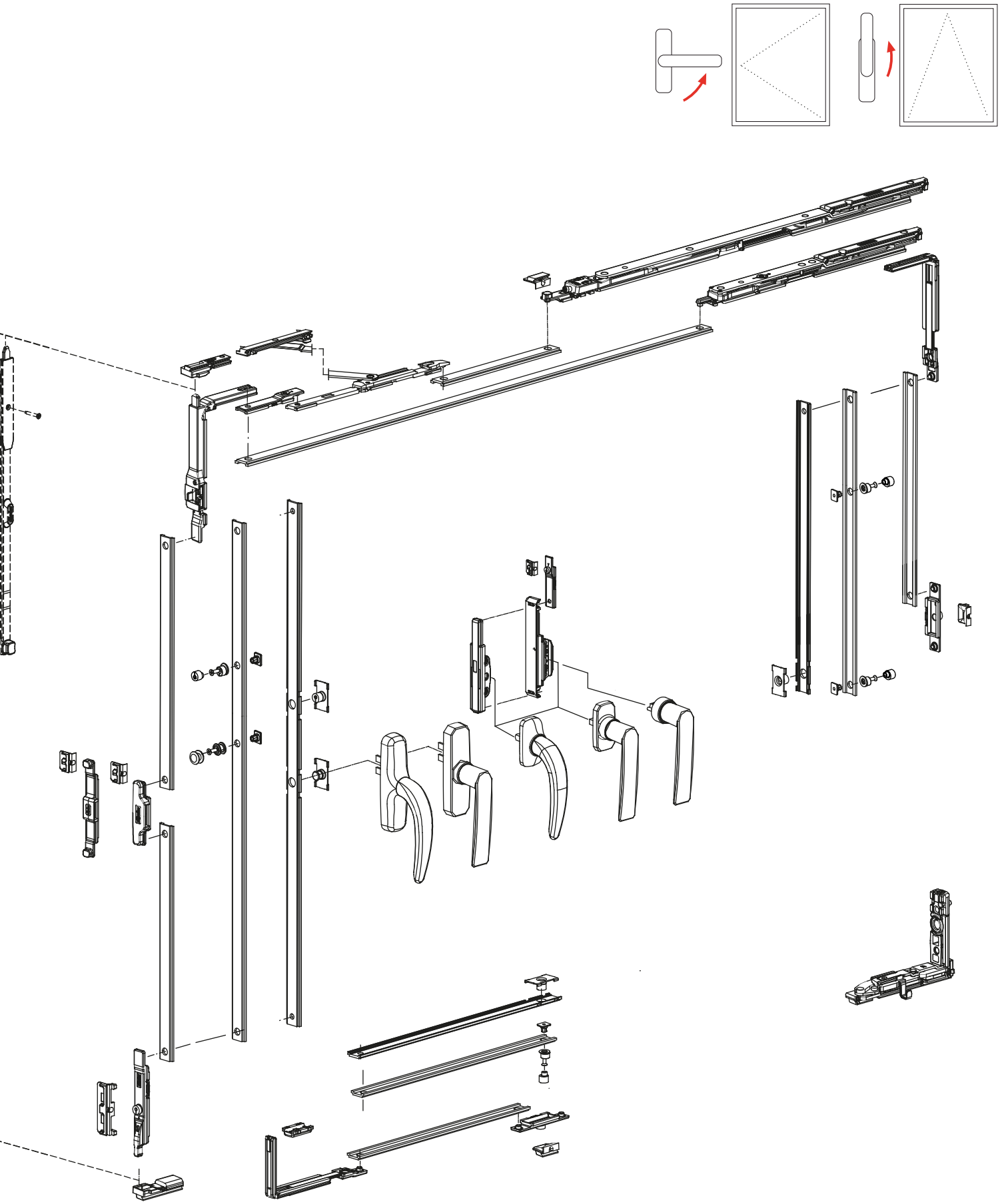

Fapim S.p.A.
Via delle Cerbaie, 114
55011 Altopascio (LU) Italy
T +39 0583 2601 F+39 0583 25291
www.fapim.it info@fapim.it
Cod.Fisc. e Part.I.V.A. 02224030466

DOMATIC
info@domatic.it www.domatic.it

BENELUX

Fapim Benelux s.pr.l.b.v.b.a.
Avenue Rue St. Roch , 17
7712 Herseaux Belgium
T +32 56 340548
F +32 56 341960
info@fapimbenelux.be

HISPANIA

Fapim Hispania s.L.
C/edison, esq. A. Ingeniero
Goicoechea 45600
Parcela, 74
Talavera De la Reina (Espana)
T +34 925 828357
F +34 925 841148
administración@fapimhispania.com
pedidos@fapimhispania.com

POLSKA

Fapim Polska sp. z o.o.
ul.Przyrzecze 4 03-107
WarszawaNIP : 536-16-29-437
T +48 227813797
F +48 227811022
Gsm 609022972

RUSSIA

Fapim RU llc
Kaluzhskaya Region
Province Borovskiy, 99km.
main way "Ukraina", building 4A
T +7 48439 97207
info@fapimru.ru

ARGENTINA

Fapim Argentina S.A.
Buschiazzo N° 347
(1611) Don Torcuato
Partido de Tigre
Buenos Aires - Argentina
T +54 (11) 48463545

DP MAGICUBE 00 05 01-17