ATRIUM Alu-SP® komfort

Additional instruction – **TWIN (FG > 160 kg)**
Additional instruction – **FH > 2180 mm**
Additional instruction – **FB > 1280 mm**

GB

200 kg | D10 | D6

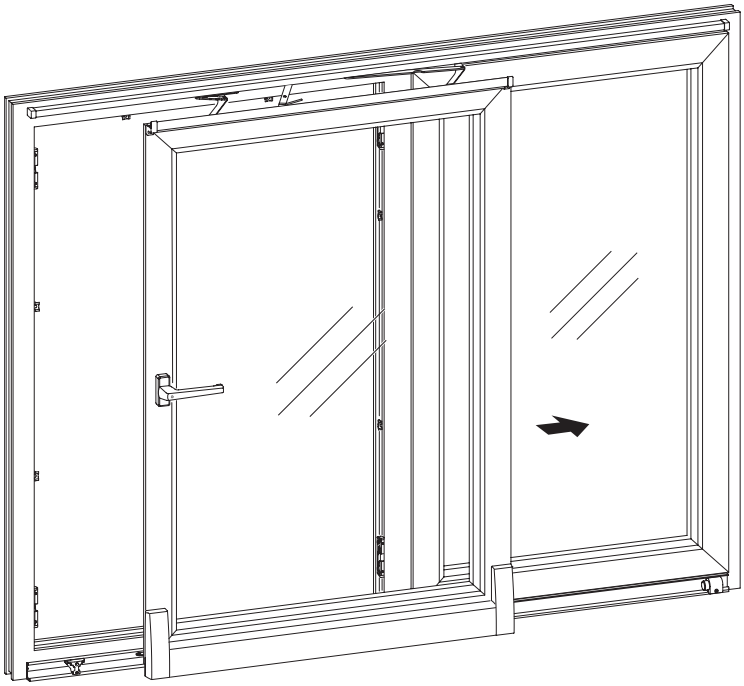

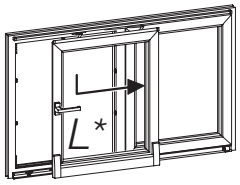

** HAUTAU version Left = DIN EN 12519 Right (right-opening)*

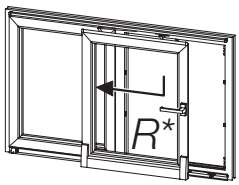

** HAUTAU version Right = DIN EN 12519 Left (left-opening)*

The figures within these mounting instructions refer to HAUTAU version Left (*DIN EN 12519 Right*).

For HAUTAU versions Right (*DIN EN 12519 Left*) measures have to be applied correspondingly.

Note:
This document is only valid in combination with the mounting instruction **ATRIUM Alu-SP® komfort**, item code: 235867.

These instruction only describes the different working steps, which are necessary to mount an element with sash weight >160 kg (FB min. 1280 mm) and/or FH > 2180 mm, FB > 1280 mm.

Contents

	page
Applications, fittings, abbrevations	2
Sash preparation, mounting TWIN-bogies FG > 160 kg	3
Horizontal alignment of sash	4
Cutting and preparing of locking rods for FH > 2180 mm; FB > 1280	5 + 6
Mounting of strikers for FH > 2180 mm, FB > 1280 mm	7
Notes	8

Proprietary note for a limited use of these documents according to DIN ISO 16016. © HAUTAU GmbH

HAUTAU GmbH · Postfach 1151 · D 31689 Helpsen
Fon +495724/393-0 · Fax -125 · Info@HAUTAU.de · www.HAUTAU.de

Applications

The limits of application quoted in these instructions are binding and must not be exceeded.
Please also comply with admissible sizes, manufacturing instructions and processing guidelines given by the profile manufacturer.

ATRIUM Alu-SP® komfort TWIN

Sash width (FB)	[mm]	1280 bis 2000
Sash height (FH)	[mm]	930 bis 2700
Sash weight (FG)	[kg]	max. 200
Sash depth (FT)	[mm]	max. 87
Overrabate height	[mm]	min. 7
Handle position		½ FH

Max. sash profile depth (FT) 87 mm.
Sash profile depths > 87 mm are possible.
To be used only after technical approval of curve, sash centre of gravity and subsequent release of product.

The use of a spring stay is required for sash weights > 100 kg. For the mounting steps refer to basic mounting instruction ATRIUM SP® komfort.

Note: For ATRIUM Alu-SP® komfort TWIN elements are only EG-Espag and EG-handles used.

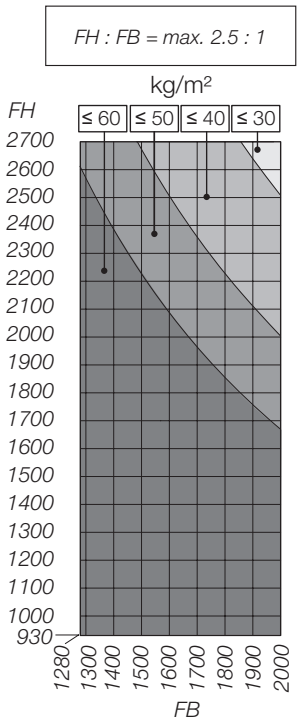

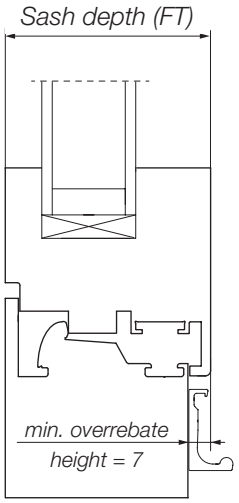

Different parts to basic mounting instruction

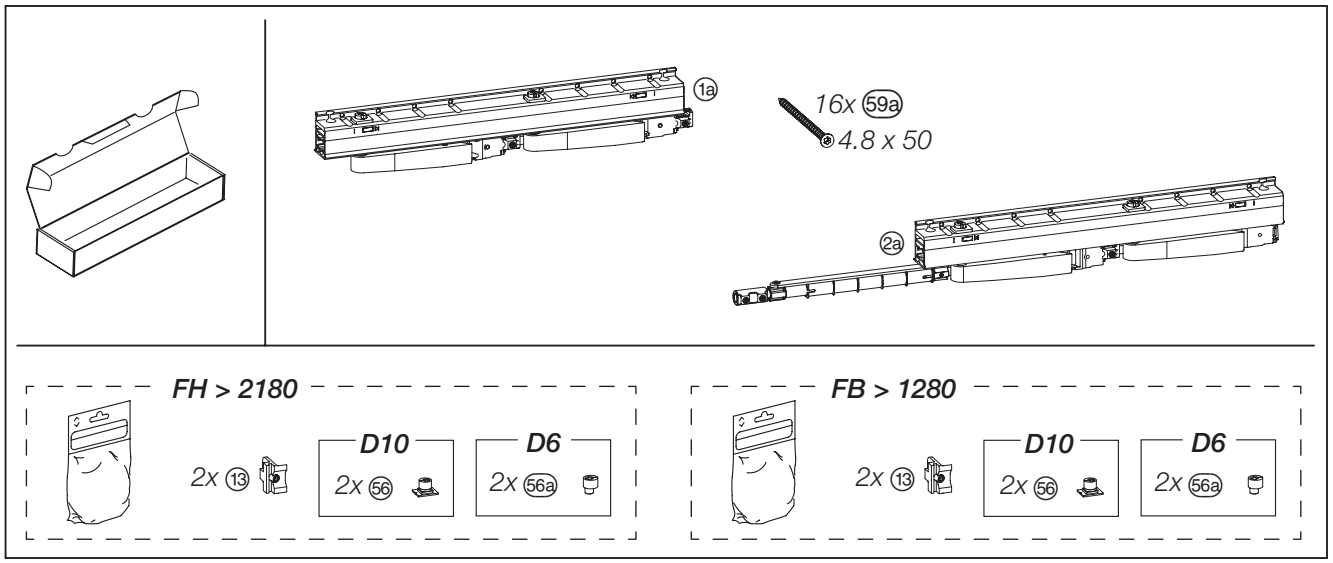

Abbreviations

FB	Sash width	FG	Sash weight
FH	Sash height	FT	Sash depth
FA	Sash overrebate		

All measurements in these instructions are indicated in millimetres (mm).

Sash preparation, mounting TWIN-bogies FG > 160 kg

Additional drillings for TWIN-bogies

– Mark additional drillings for TWIN-bogies 1a/2a drill with Ø 4.2.

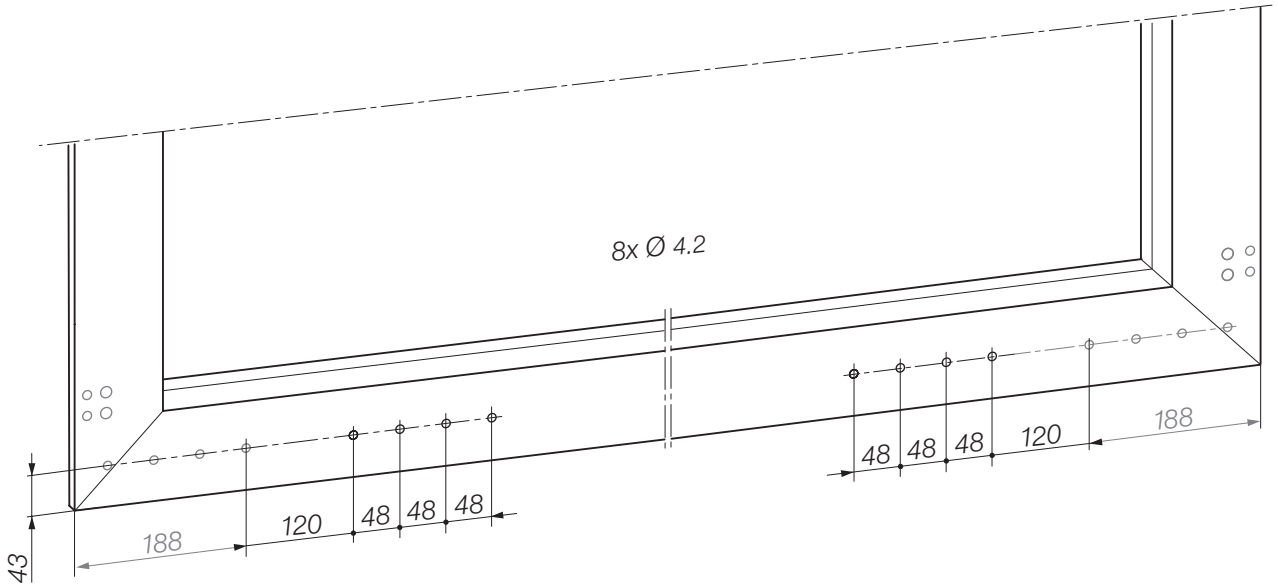

Mounting TWIN-bogies

– Tighten bogie 1a/2a with 4 screws 4.8 x 50 each at sash.

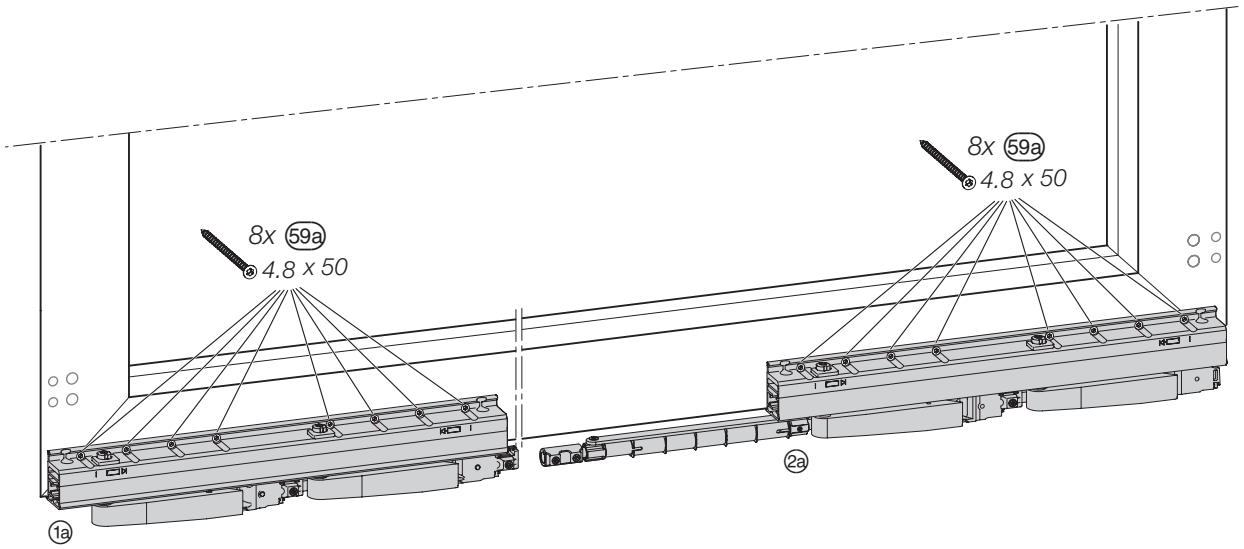

Horizontal sash alignment

A Check fittings cavity top and bottom on both sides (not shown).

B Remove anti-twist protections.

C Lift bogies (Torx 40) by means of adjusting screws in order to align sash.
Note: If the height of the bogies is set to different levels, the guide block stay system (48a) must be realigned (see page 18 of basic mounting instruction). The adjusting screws are allowed to be turned out **max. 11 mm**.

⚠ **Attention:** If the adjusting screws are turned out more than 11 mm, the bogies will be destroyed.

The bogies are adjusted equally ex works. For correct alignment of sash, each bogie has to be adjusted at its both adjusting screws equally to avoid tilting.

D Put anti-twist protections on adjusting screws; at first, correct orientation of adjusting screws, if necessary. The anti-twist protections have to be positioned parallel to the outer edge of the bogies.

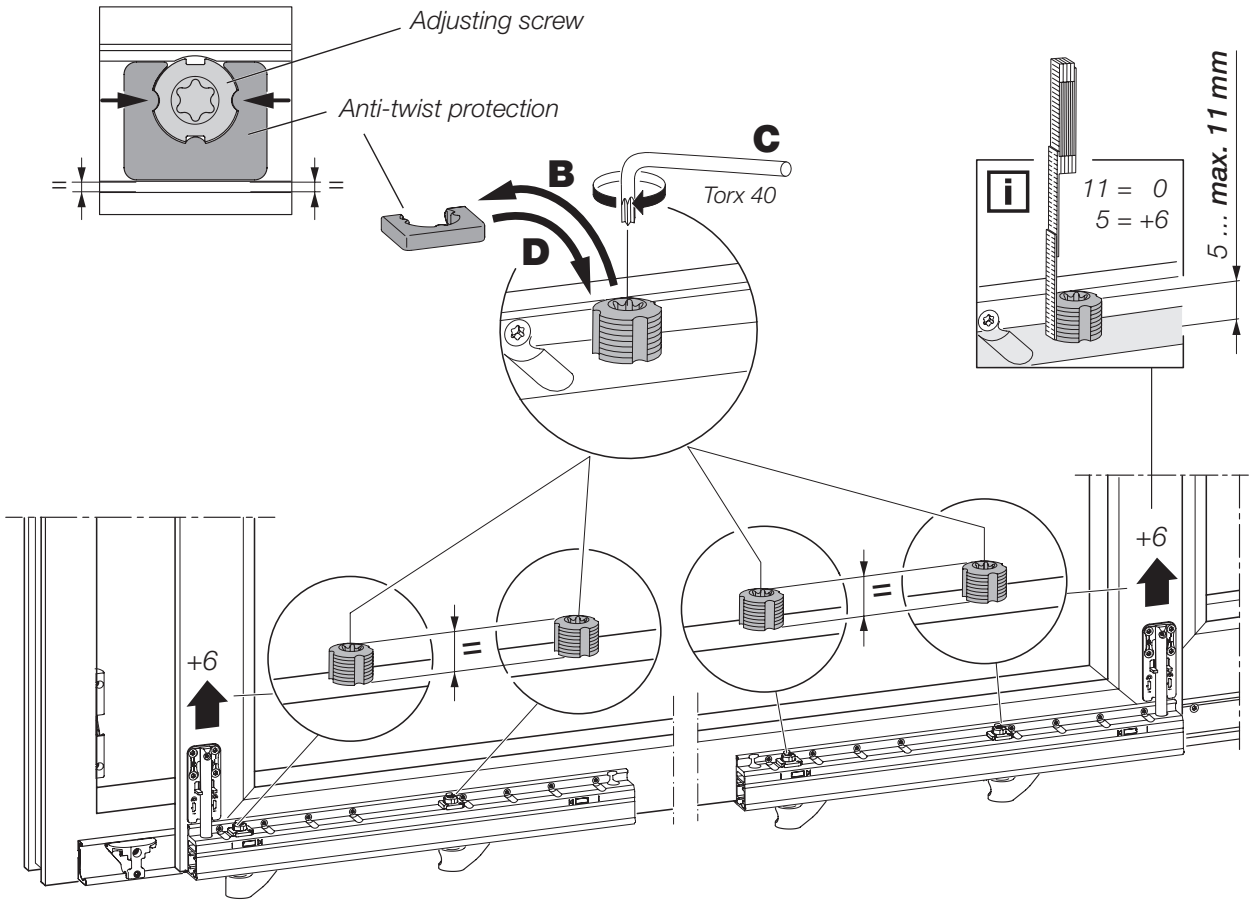

Cutting and preparing of locking rods for FH > 2180 mm, FB > 1280 mm

Cutting and preparing of locking rods D10 and D6

- Cut the locking rods (58) to size. Subtraction measures according to sash overrebate (FA), see tables on the next page.
- Cut locking rods with Ø 10,1 (D10) or Ø 6,1 (D6).
- Mount insertion stud D10 (56) or rivet stud D6 (58a).

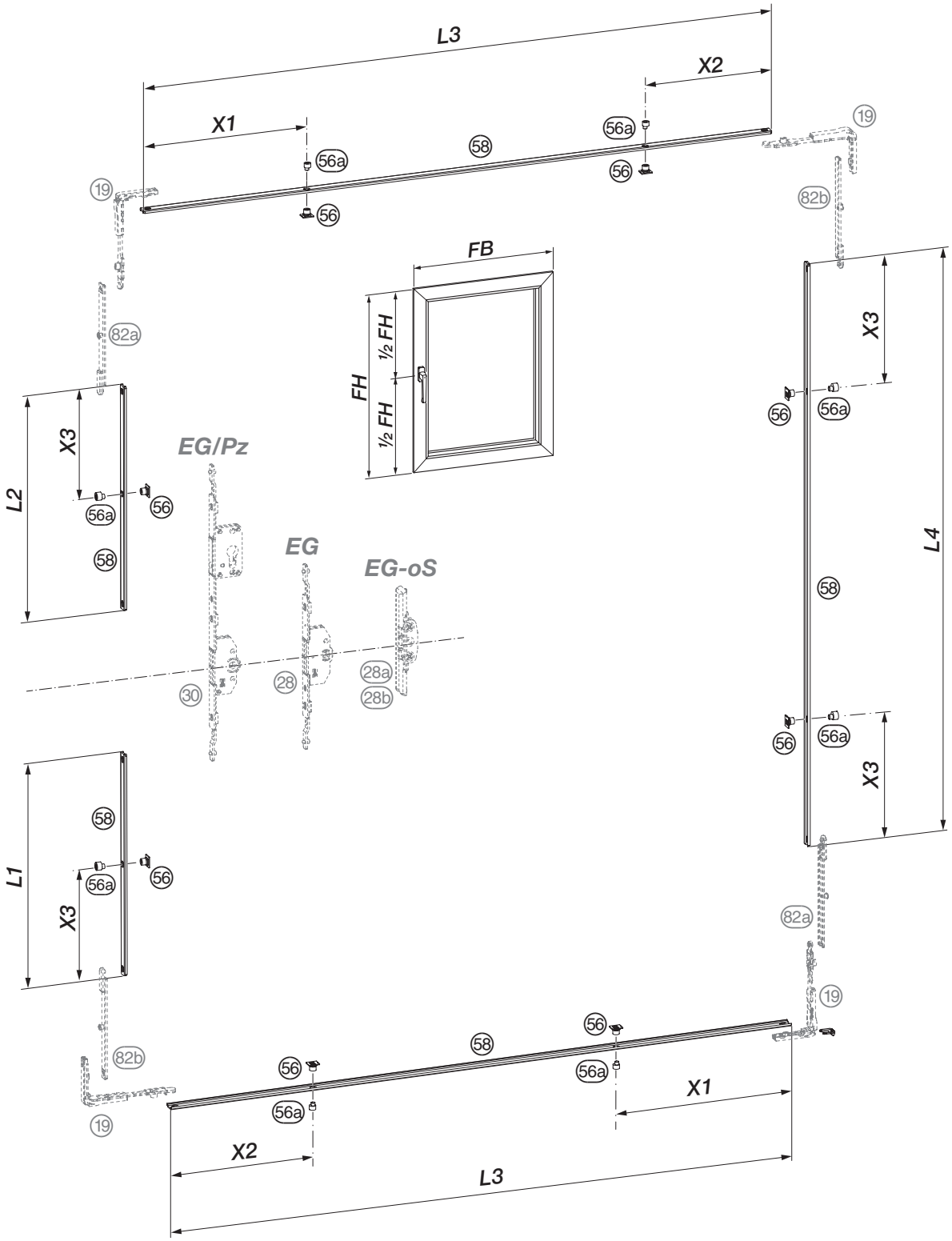

Cutting and preparing of locking rods for FH > 2180 mm, FB > 1280 mm

D10	Griff EG	Griff EG/Pz	Griff EG-oS
	FA = 6		
L1	½FH - 371.5		½FH - 312
L2	½FH - 475	½FH - 668.5	½FH - 415.5
L3	FB - 208,5		
L4	FH - 607,5		
X1	FB/4 - 18		
X2	FB/4 - 86		
X3	(FH - 408)/3 - 100		
	FA = 5		
L1	½FH - 370.5		½FH - 311
L2	½FH - 474	½FH - 667.5	½FH - 414.5
L3	FB - 206,5		
L4	FH - 605,5		
X1	FB/4 - 16		
X2	FB/4 - 84		
X3	(FH - 408)/3 - 98		
	FA = 4		
L1	½FH - 369.5		½FH - 310
L2	½FH - 473	½FH - 666.5	½FH - 413.5
L3	FB - 204,5		
L4	FH - 603,5		
X1	FB/4 - 14		
X2	FB/4 - 82		
X3	(FH - 408)/3 - 96		

D6	Griff EG	Griff EG/Pz	Griff EG-oS
	FA = 6		
L1	½FH - 371.5		½FH - 314
L2	½FH - 475	½FH - 668.5	½FH - 417.5
L3	FB - 208		
L4	FH - 607		
X1	FB/4 - 18		
X2	FB/4 - 86		
X3	(FH - 408)/3 - 100		
	FA = 5		
L1	½FH - 370.5		½FH - 313
L2	½FH - 474	½FH - 667.5	½FH - 416.5
L3	FB - 206		
L4	FH - 605		
X1	FB/4 - 16		
X2	FB/4 - 84		
X3	(FH - 408)/3 - 98		
	FA = 4		
L1	½FH - 369.5		½FH - 312
L2	½FH - 473	½FH - 666.5	½FH - 415.5
L3	FB - 204		
L4	FH - 603		
X1	FB/4 - 14		
X2	FB/4 - 82		
X3	(FH - 408)/3 - 96		

Mounting of strikers for FH > 2180 mm, FB > 1280 mm

Mounting strikers to frame

Fix strikers ⑬/⑬b according to figure and table below (Torx 10).

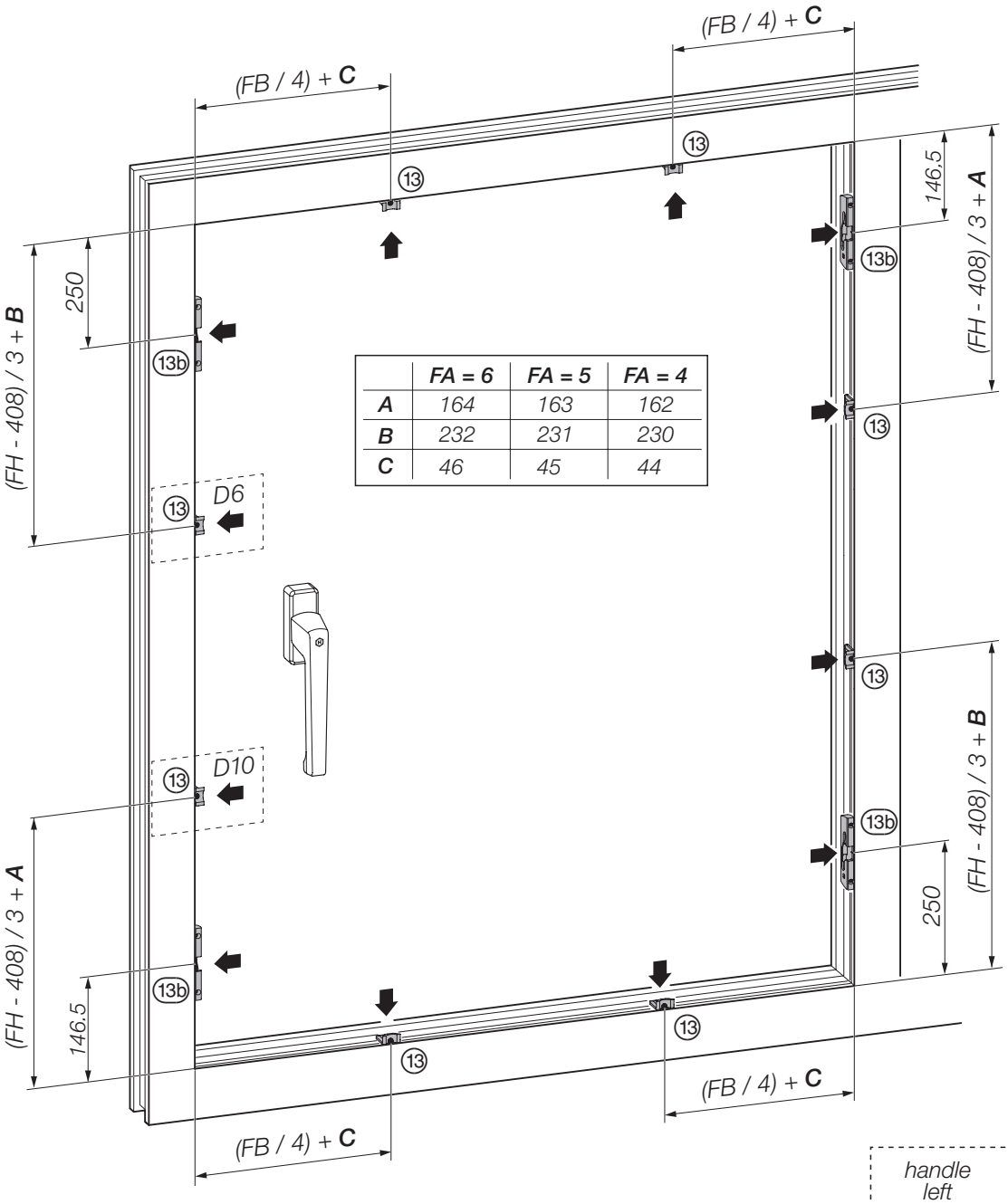

	FA = 6	FA = 5	FA = 4
A	164	163	162
B	232	231	230
C	46	45	44

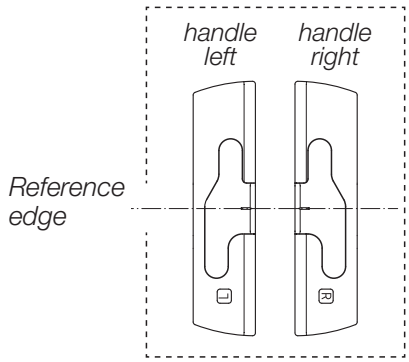

Notes